ASHCROFT®
Trust the shield.®

1008 Stainless Steel Case Gauge

FEATURES

- Corrosion resistant stainless steel case
- Dry gauges are field fillable
- Power***Flex***™ movement provides superior resistance to shock, vibration and pulsation
- True Zero™ reduces reading errors by using "zero box" instead of conventional dial pins
- ***PLUS!***™ performance available for liquid filled performance with a dry gauge
- MSL helium leak tested to $1X10^{-6}$ scc/s
- Ventable fill plug
- Accessory kits for easy panel mounting (u-clamp and front flange)

TYPICAL USES

- Pumps and compressors
- Hydraulic and pneumatics
- Specialized OEM equipment
- Food and beverage

SPECIFICATIONS

Accuracy:	±1.6% of span (Dry) ±2% of span (Liquid filled)
Dial Sizes:	63mm (2½") , 100mm (3½")
Ranges:	Minimum 0-15 psi, maximum 0-15,000 psi, vacuum and compound
Wetted Materials	
Tube:	316L SS
Process Connection:	316L SS
Non Wetted Materials	
Window:	Polycarbonate
Dial:	Black figures on white background, aluminum
Pointer:	Black, aluminum
Movement:	Power***Flex***™ movement, inaccessible Bottom plate – 304 SS Upper plate – 304 SS Pin – 304 SS Hairspring assembly – 304 SS Pinion – 304 SS Segment - Glass filled polyester
Case:	304 SS (Std.), 316L SS (XYW)
Ring:	304 SS (Std.), 316L SS (XYW)
Process Connection Location:	Lower, Back, Top, 3 o'clock, 9 o'clock
Process Connection Sizes:	⅛ NPT, ¼ NPT (see ordering code for more options)
Dampening:	Glycerin case fill (Std. liquid fill), Silicone case fill (XGV), Halocarbon® case fill (XGX), ***PLUS!***™ Performance (XLL)

KEY BENEFITS

- **IP65 Rating**
- **NEMA 4X**
- **CRN Approved**
- **PED**
- ***PLUS!***™ **Performance (XLL)**

Weather Protection:	IP65 (Plug closed), IP54 (Plug vented) NEMA 4X (Plug closed)
Approvals:	CRN, RoHS, PED
Options	YW - 316L SS case and ring and flange SM - All SS movement LL - ***PLUS!***™ performance 6B - Cleaned for oxygen service FF - Front flange FW - Back flange UC - U-clamp (see ordering code for more options)

MIN/MAX TEMPERATURE LIMITS

Version	Ambient	Process	Storage
Dry	-40/200°F (-40/93°C)	-40/250°F (-40/121°C)	-40/250°F (-40/121°C)
PLUS!	-40/150°F (-40/66°C)	-40/200°F (-40/93°C)	-40/150°F (-40/66°C)
Glycerin Fill	20/150°F (-7/66°C)	20/200°F (-7/93°C)	0/150°F (-18/66°C)
Silicone Fill	-40/150°F (-40/66°C)	-40/200°F (-40/93°C)	-40/150°F (-40/66°C)
Halocarbon Fill	-40/150°F (-40/66°C)	-40/200°F (-40/93°C)	-40/150°F (-40/66°C)

All specifications are subject to change without notice.
All sales subject to standard terms and conditions.
©2017 Ashcroft Inc. Ash Bul GS-1 1008 Rev. B 11/17

ashcroft.com
info@ashcroft.com
1.800.328.8258

ASHCROFT®
Trust the shield.®

1008 Stainless Steel Case Gauge

ORDERING CODE

Example:	631008	S	L	02	L	XC4	15#
Dial Size/Series Code							
631008 – Stainless steel case	631008						
101008 – Stainless steel case							
System							
S - 316L SS tube/316L SS process connection (Max. pressure 15,000)		S					
Case Fill							
Dry, liquid fillable case							
L - Liquid filled case (Glycerin standard)			L				
Process Connection Sizes							
01 - ⅛ NPT Male							
02 - ¼ NPT Male				02			
04 - ½ NPT Male, lower only							
RW - SAE 7⁄16 & 20 Straight thread							
KJ - ¼ Straight JIS, BSP							
KA - ¼ Tapered JIS, BSP							
13 - G ¼″ DIN							
JP - ¼″ Tubing, no throttle plug (max pressure 10,000 psi)							
JQ - 6mm Tubing, no throttle plug (max pressure 6,000 psi)							
Connection Location							
L - Lower mount connection					L		
B - Lower back mount connection							
D - Side connection (3 o'clock)							
E - Side connection (9 o'clock)							
T - Top connection							
Options							
LL - ***PLUS!***™ performance							
GV - Silicone case fill							
GX - Halocarbon case fill							
TU - Throttling device for ranges up to 1000 psi							
TS - Throttling device for ranges up to 15,000 psi							
6B - Cleaned for oxygen service							
NH - Stainless steel tag wired to case							
FF - Front flange							
FW - Back flange							
UC - U-clamp							
C4 - Individual calibration chart in accordance with ASME B40.100:2013. Accuracy traceable to N.I.S.T						C4	
SM - All stainless steel movement							
YW - 316L stainless steel case and ring							
Range (coding examples only, see range table for all standard ranges)							
Single Scales							
15# - 15 psi							15#
1BR - 1 bar							
1KSC - 1 kilograms per sq. cm							
100KP - 100 kilopascal							
Dual Scales							
15#/BR - 15 psi inner scale, 1 bar outer scale							
1BR/# - 1 bar inner scale, 15 psi outer scale							

All specifications are subject to change without notice.
All sales subject to standard terms and conditions.
©2017 Ashcroft Inc. Ash Bul GS-1 1008 Rev. B 11/17

ashcroft.com
info@ashcroft.com
1.800.328.8258

ASHCROFT®
Trust the shield.®

1008 Stainless Steel Case Gauge

STANDARD RANGES				
psi	bar	kPa	Mpa	kg/cm²
30IMV	-1BR	-100KP	-.1MP	-1KSC
–	-1&.6BR	-100&60KP	-.1&.06MP	-1&.6KSC
30IMV&15#	–	–	–	–
–	-1&1.5BR	-100&150KP	-.1&.15MP	-1&1.5KSC
30IMV&30#	–	–	–	–
–	-1&3BR	-100&300KP	-.1&.3MP	-1&3KSC
30IMV&60#	–	–	–	–
–	-1&5BR	-100&500KP	-.1&.5MP	-1&5KSC
30IMV&100#	–	–	–	–
–	1&9BR	-100&900KP	-.1&.9MP	-1&9KSC
15#	1BR	100KP	.1MP	1KSC
20#	–	–	–	–
–	1.6BR	160KP	.16MP	1.6KSC
30#	–	–	–	–
–	2.5BR	250KP	.25MP	2.5KSC
60#	4BR	400KP	.4MP	4KSC
–	6BR	600KP	.6MP	6KSC
100#	–	–	–	–
120#	–	–	–	–
–	10BR	1000KP	1MP	10KSC
160#	–	–	–	–
200#	–	–	–	–
–	16BR	1600KP	1.6MP	16KSC
300#	–	–	–	–
–	25BR	2500KP	2.5MP	25KSC
400#	–	–	–	–
500#	–	–	–	–
600#	40BR	4000KP	4MP	40KSC
800#	–	–	–	–
–	60BR	6000KP	6MP	60KSC
1000#	–	–	–	–
1500#	100BR	10000KP	10MP	100KSC
2000#	–	–	–	–
–	160BR	16000KP	16MP	160KSC
3000#	–	–	–	–
–	250BR	25000KP	25MP	250KSC
4000#	–	–	–	–
5000#	–	–	–	–
6000#	400BR	40000KP	40MP	400KSC
8000#	–	–	–	–
–	600BR	60000KP	60MP	600KSC
10000#	–	–	–	–
15000#	1000BR	100000KP	100MP	1000KSC

All specifications are subject to change without notice.
All sales subject to standard terms and conditions.
©2017 Ashcroft Inc. Ash Bul GS-1 1008 Rev. B 11/17

ashcroft.com
info@ashcroft.com
1.800.328.8258

ASHCROFT®
Trust the shield.®

1008 Stainless Steel Case Gauge

DIMENSIONS (dimensions in [ ] are millimeters)

100mm 1008 Lower and Back Connect

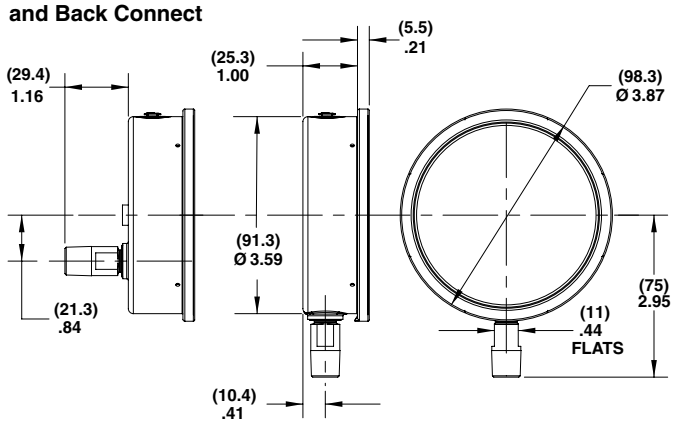

63mm 1008 Lower and Back Connect

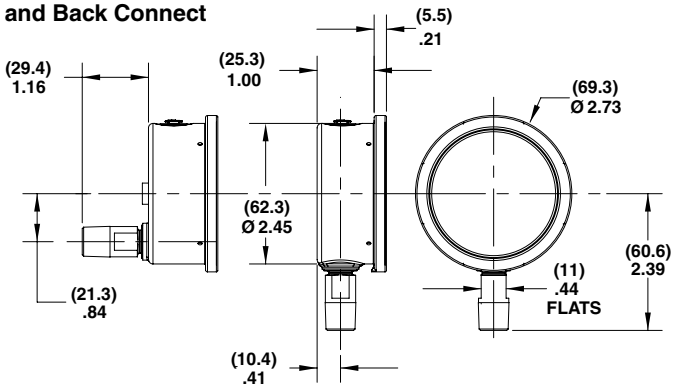

100mm 1008 Back Connect (XUC)

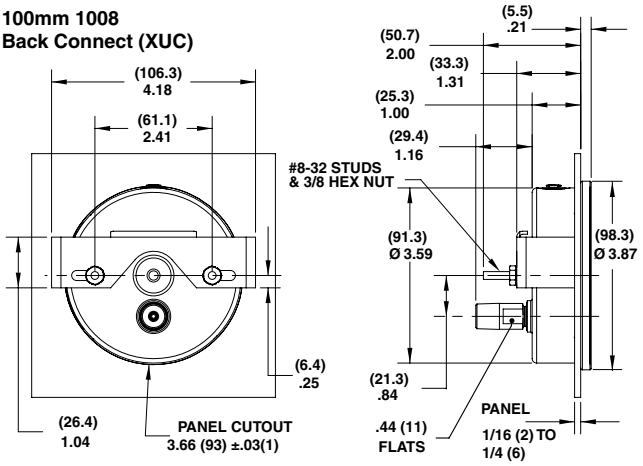

63mm 1008 Back Connect (XUC)

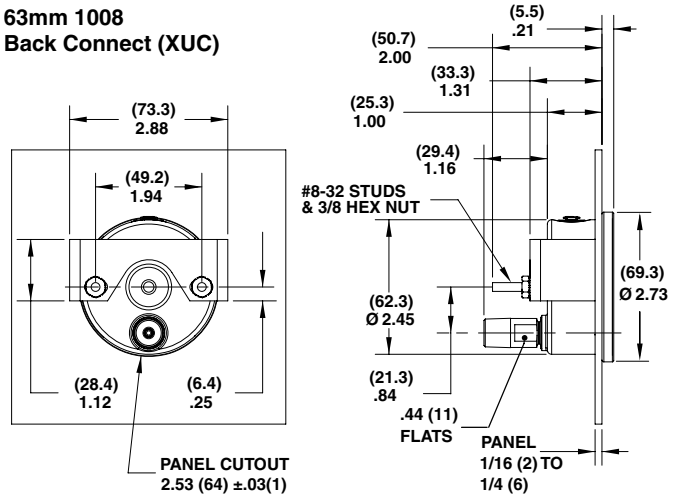

100mm 1008 Back Connect (XFF)

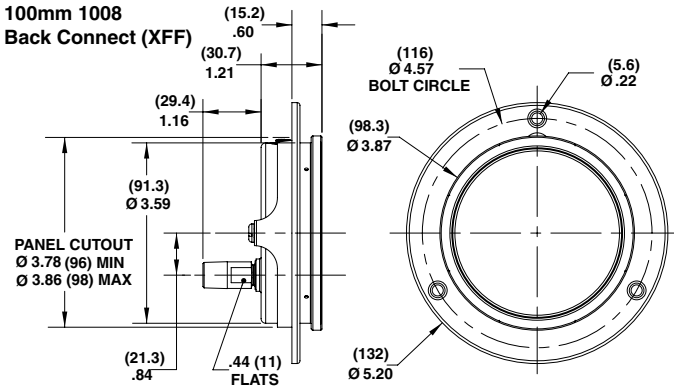

63mm 1008 Back Connect (XFF)

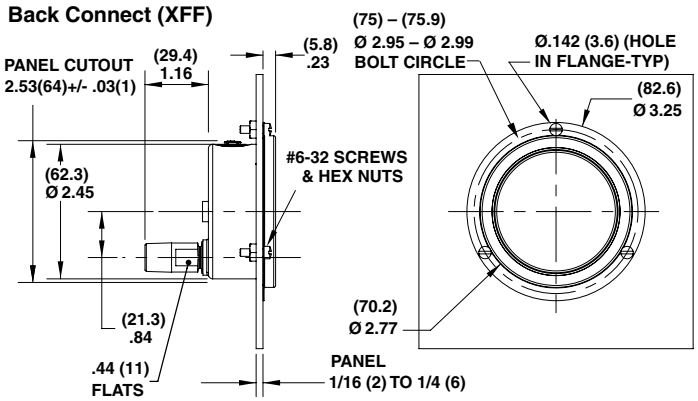

©2017 Ashcroft Inc. Ash Bul GS-1 1008 Rev. B 11/17

ashcroft.com
info@ashcroft.com
1.800.328.8258